Shp 27/04

Work Order ID 68593

Monday, April 18, 2011 11:18:38 AM

Item ID: D3712-042
Revision ID:
Item Name: Basket Base Assembly

Accept

Setup Start
Stop

Start Date: 4/18/2011 **Start Qty:** 1.00
Required Date: 4/27/2011 **Req'd Qty:** 1.00
Reference:

Cust Item ID:
Customer:

Run Start
Stop

Approvals: **Process Plan:** _____ **Date:** _____ **Tooling:** _____ **Date:** _____
QC: _____ **Date:** _____ **SPC (Y/N):** _____ **Date:** _____

Sequence ID/ Work Center ID	Operation Description	Set Up/ Run Hours	Tool ID	Tool #	Plan Code	Accept Qty	Reject Qty	Reject Number	Insp. Stamp
Draw Nbr	**Revision Nbr**								
D3712	Rev B								
100	Weld per dwg A/R S.S. rod Batch: 1114649	0.00							
Large Fab	Large Fab								
Large Fab	**Memo**	0.00							
Large Fab	1- take D3166-1 and trim as per dwg D3746 to make D3746-1, D3746-3, D3746-5 and D3746-7 using DT8996 ✓								
	2- take D3746-3, D3746-5, D3746-7 and drill holes as per dwg D3746 using drill jig DT8995 and DT8996 ✓								
	3- drill holes in both D3727-1 as per dwg D3727 ✓								
	4- drill holes in D3735-3 as per dwg D3735 using DT9000 jig ✓								
	5- deburr ✓								
	6- assemble as per dwg D3712 and weld as per QSI004 ✓								

SG 11.04.21 (1x)

PTO →

Dart Aerospace Ltd

W/O:	WORK ORDER CHANGES						
DATE	STEP	PROCEDURE CHANGE	By	Date	Qty	Approval Chief Eng / Prod Mgr	Approval QC Inspector

Part No: D3712-042 PAR #: N/A Fault Category: Large PAR. welding NCR: Yes No DQA: A Date: 11.05.02

11-5.02 Resolution: Re work. Disposition: Rework QA: N/C Closed: CK Date: 11/05/03

NCR: 68593	WORK ORDER NON-CONFORMANCE (NCR)							
DATE	STEP	Description of NC Section A	Corrective Action Section B: Initial Chief Eng	Action Description Chief Eng	Sign & Date	Verification Section C	Approval Chief Eng	Approval QC Inspector
11.04.20	100	D3746-7 WEDED MIRROR TO WHAT SUPPOSED TO BE RC: INATENTION LOA	11.04.20 GS1042	ACCEPTABLE DEVIATION, WILL NOT AFFECT STRUCTURAL INTEGRITY OF BASKET. TRANSFER DRILL 2x Ø0.375" USING DT 8996.	11.04.20	11/04/20	11.04.20 GS1042.	11/04/20
				WELD IN PLACE 2x D3759-1 BUSHINGS PER D3746-7 RLB. RECORD B/N + SIGN OFFS BELOW:				
				D3759 → B66489 ~~B66445~~ A/R ~~M+1096~~				

NOTE: Date & initial all entries

Work Order ID 68593

Monday, April 18, 2011 11:18:38 AM

Item ID: D3712-042 **Accept** **Setup Start** **Stop**

Revision ID:

Item Name: Basket Base Assembly

Start Date: 4/18/2011 **Start Qty:** 1.00 **Cust Item ID:**

Required Date: 4/27/2011 **Req'd Qty:** 1.00 **Customer:**

Reference:

Run Start **Stop**

Approvals: **Process Plan:** _____ **Date:** _____ **Tooling:** _____ **Date:** _____

QC: _____ **Date:** _____ **SPC (Y/N):** _____ **Date:** _____

Sequence ID/ Work Center ID	Operation Description	Set Up/ Run Hours	Tool ID	Tool #	Plan Code	Accept Qty	Reject Qty	Reject Number	Insp. Stamp
110	Weld per dwg A/R S.S. rod Batch: M1114649	0.00							
Large Fab	Large Fab								
Large Fab	**Memo**	0.00					11.04.21		
	1- cut mesh to fit inside basket base and sides as per dwg D3744 and D3745 ✓								
	2- weld mesh as per dwg D3712 ✓								
120	QC5- Inspect part completeness to step on W/O	0.00							
QC	**Memo**	0.00							
Quality Control									
130	QC9- Inspect visual per QSI004- Fusion Welds	0.00							
QC	**Memo**	0.00					11.04.21		
Quality Control									

Dart Aerospace Ltd

W/O:		WORK ORDER CHANGES					
DATE	STEP	PROCEDURE CHANGE	By	Date	Qty	Approval Chief Eng / Prod Mgr	Approval QC Inspector

Part No: _____ **PAR #:** _____ **Fault Category:** _____ **NCR:** Yes No **DQA:** _____ **Date:** _____

Resolution: _____ **Disposition:** _____ **QA: N/C Closed:** _____ **Date:** _____

NCR:		WORK ORDER NON-CONFORMANCE (NCR)						
DATE	STEP	Description of NC Section A	Corrective Action Section B			Verification Section C	Approval Chief Eng	Approval QC Inspector
			Initial Chief Eng	Action Description Chief Eng	Sign & Date			

NOTE: Date & initial all entries

H:\fFORMS\Quality Assurance\approved QA\NCRWO RevE

Work Order ID 68593

Monday, April 18, 2011 11:18:38 AM

Item ID: D3712-042 **Accept** **Setup Start** **Stop**

Revision ID:

Item Name: Basket Base Assembly

Start Date: 4/18/2011 **Start Qty:** 1.00 **Cust Item ID:**

Required Date: 4/27/2011 **Req'd Qty:** 1.00 **Customer:**

Reference:

Run Start **Stop**

Approvals: **Process Plan:** _____ **Date:** _____ **Tooling:** _____ **Date:** _____

QC: _____ **Date:** _____ **SPC (Y/N):** _____ **Date:** _____

Sequence ID/ Work Center ID	Operation Description	Set Up/ Run Hours	Tool ID	Tool #	Plan Code	Accept Qty	Reject Qty	Reject Number	Insp. Stamp
135	Pressure Wash per QSI005 4.3	0.00							
HandFinish						1	BR 11-4-26		
	Memo	0.00							
Hand Finishing									
140	White Gloss(Ref:4.3.5.2) per QSI005 4.3-Steel	0.00							
Powdercoat	M116964.					1	BR 11-4-26		
	Memo	0.00							
Powder Coating	First coat: START TIME: 3:35 OVEN TEMPERATURE: 400° FINISH TIME: 4:05. ***if necessary*** Second coat: START TIME: _____ OVEN TEMPERATURE: _____ FINISH TIME: _____								

Dart Aerospace Ltd

W/O:		WORK ORDER CHANGES					
DATE	STEP	PROCEDURE CHANGE	By	Date	Qty	Approval Chief Eng / Prod Mgr	Approval QC Inspector

Part No: _____ **PAR #:** _____ **Fault Category:** _____ **NCR:** Yes No **DQA:** _____ **Date:** _____

Resolution: _____ **Disposition:** _____ **QA: N/C Closed:** _____ **Date:** _____

NCR:		WORK ORDER NON-CONFORMANCE (NCR)						
DATE	STEP	Description of NC Section A	Corrective Action Section B			Verification Section C	Approval Chief Eng	Approval QC Inspector
			Initial Chief Eng	Action Description Chief Eng	Sign & Date			

NOTE: Date & initial all entries

Work Order ID 68593

Monday, April 18, 2011 11:18:38 AM

Item ID: D3712-042 **Accept** **Setup Start**

Revision ID:

Item Name: Basket Base Assembly **Stop**

Start Date: 4/18/2011 **Start Qty:** 1.00 **Cust Item ID:**

Required Date: 4/27/2011 **Req'd Qty:** 1.00 **Customer:**

Reference:

Run Start

Approvals: **Process Plan:** _____ **Date:** _____ **Tooling:** _____ **Date:** _____

Stop

QC: _____ **Date:** _____ **SPC (Y/N):** _____ **Date:** _____

Sequence ID/ Work Center ID	Operation Description	Set Up/ Run Hours	Tool ID	Tool #	Plan Code	Accept Qty	Reject Qty	Reject Number	Insp. Stamp
150	QC3- Inspect Part Finish	0.00							
QC	**Memo**	0.00							
Quality Control									
160	Pick Kit	0.00							
Packaging	**Memo**	0.00							
Packaging									
170	Small Fab	0.00							
Small Fab	**Memo**	0.00							
Small Fab	Assemble as per dwg D3712								

Dart Aerospace Ltd

W/O:		WORK ORDER CHANGES					
DATE	STEP	PROCEDURE CHANGE	By	Date	Qty	Approval Chief Eng / Prod Mgr	Approval QC Inspector

Part No: _____ **PAR #:** _____ **Fault Category:** _____ **NCR:** Yes No **DQA:** _____ **Date:** _____

Resolution: _____ **Disposition:** _____ **QA: N/C Closed:** _____ **Date:** _____

NCR:		WORK ORDER NON-CONFORMANCE (NCR)						
DATE	STEP	Description of NC Section A	Corrective Action Section B			Verification Section C	Approval Chief Eng	Approval QC Inspector
			Initial Chief Eng	Action Description Chief Eng	Sign & Date			

NOTE: Date & initial all entries

H:\fFORMS\Quality Assurance\approved QA\NCRWO RevE

Work Order ID 68593

Monday, April 18, 2011 11:18:38 AM

Item ID: D3712-042 **Accept** **Setup Start** **Stop**

Revision ID:

Item Name: Basket Base Assembly

Start Date: 4/18/2011 **Start Qty:** 1.00 **Cust Item ID:**

Required Date: 4/27/2011 **Req'd Qty:** 1.00 **Customer:**

Reference:

Run Start **Stop**

Approvals: **Process Plan:** _____ **Date:** _____ **Tooling:** _____ **Date:** _____

QC: _____ **Date:** _____ **SPC (Y/N):** _____ **Date:** _____

Sequence ID/ Work Center ID	Operation Description	Set Up/ Run Hours	Tool ID	Tool #	Plan Code	Accept Qty	Reject Qty	Reject Number	Insp. Stamp
180	QC5- Inspect part completeness to step on W/O	0.00							
QC	Memo	0.00	11/04/27			(40)			
Quality Control									
190	Identify as per dwg & Stock Location G-A	0.00							
Packaging	Memo W/O 68592	0.00				11/04/27		(1)	
Packaging									
200	QC21- Final Inspection - Work Order Release	0.00							
QC	Memo	0.00						11/4/27	
Quality Control									

MF 11-04-27

Dart Aerospace Ltd

W/O:		WORK ORDER CHANGES					
DATE	STEP	PROCEDURE CHANGE	By	Date	Qty	Approval Chief Eng / Prod Mgr	Approval QC Inspector

Part No: _____ **PAR #:** _____ **Fault Category:** _____ **NCR:** Yes No **DQA:** _____ **Date:** _____

Resolution: _____ **Disposition:** _____ **QA: N/C Closed:** _____ **Date:** _____

NCR:		WORK ORDER NON-CONFORMANCE (NCR)						
DATE	STEP	Description of NC Section A	Corrective Action Section B			Verification Section C	Approval Chief Eng	Approval QC Inspector
			Initial Chief Eng	Action Description Chief Eng	Sign & Date			

NOTE: Date & initial all entries

H:\fFORMS\Quality Assurance\approved QA\NCRWO RevE

Picklist Print

Monday, April 18, 2011 11:18:35 AM

4

Work Order ID: 68593

Parent Item: D3712-042

Parent Item Name: Basket Base Assembly

Start Date: 4/18/2011 **Required Date:** 4/27/2011

Start Qty: 1.00 **Required Qty:** 1.00

Comments: IPP Rev:A new issue 08-01-30 DD verified by:EC
IPP Rev:B chg to revB ecn 1145 08-03-19 DD verified by:JLM IPP ReV:C
10.10.21 added pressure wash DD verf:JLM

Component Item ID/ Item Name	Replacement Item ID	Mfg/ Purch	Bin Item	Primary Location	Last Location	Route Seq ID	Unit of Measure	Qty on Hand	Qty per Kit	Total Qty	Qty Issued	Date Issued	Status
D2327-3 Spacer Bushing		Manufactured	No			100	Each	9.0000	2	2	11·04·20		
				Location		**Loc Qty**		**Loc Code**					
				WA005		9							
					66535	9				2x			
D2581 Mounting Bracket		Manufactured	No			100	Each	22.0000	2	2	11·04·20		
				Location		**Loc Qty**		**Loc Code**					
				WA005		22							
					66806	22				2x			
D3166-1 Basket Hoop		Manufactured	No			100	Each	22.0000	5	5	11·04·20		
				Location		**Loc Qty**		**Loc Code**					
				WA		22							
					66719	22				5x			
D3725-1 Hoop		Manufactured	No			100	Each	16.0000	2	2	11·04·20		
				Location		**Loc Qty**		**Loc Code**					
				WA005		16							
					50939	5							
					51118	11				2x			

Dart Aerospace Ltd

W/O:		WORK ORDER CHANGES					
DATE	STEP	PROCEDURE CHANGE	By	Date	Qty	Approval Chief Eng / Prod Mgr	Approval QC Inspector

Part No: _____ **PAR #:** _____ **Fault Category:** _____ **NCR:** Yes No **DQA:** _____ **Date:** _____

Resolution: _____ **Disposition:** _____ **QA: N/C Closed:** _____ **Date:** _____

NCR:		WORK ORDER NON-CONFORMANCE (NCR)						
DATE	STEP	Description of NC Section A	Corrective Action Section B			Verification Section C	Approval Chief Eng	Approval QC Inspector
			Initial Chief Eng	Action Description Chief Eng	Sign & Date			

NOTE: Date & initial all entries

H:\fFORMS\Quality Assurance\approved QA\NCRWO RevE

Picklist Print

Monday, April 18, 2011 11:18:35 AM

Work Order ID: 68593

Parent Item: D3712-042

Parent Item Name: Basket Base Assembly

Start Date: 4/18/2011 **Required Date:** 4/27/2011

Start Qty: 1.00 **Required Qty:** 1.00

D3748-1	Manufactured	No	100	Each	4.0000	3	3	11.04.20
Hinge Half								

Location		Loc Qty	Loc Code
WA005		4	
	57151	4	

3A

D3757-1	Manufactured	No	100	Each	21.0000	2	2	4/04/27
Blanking Plate								

Location		Loc Qty	Loc Code
ST515		21	
	51119	5	
	66860	16	

2

D3759-1	Manufactured	No	100	Each	277.0000	21	21	11.04.20
Bushing								

Location		Loc Qty	Loc Code
WA005		277	
	66489	77	
	66870	200	

21A

M304TS0.750W.065	Purchased	No	100	f	663.2940	42.659	44.9042A	11.04.20
304 SQ Tube .75x.75x.065W								

Location		Loc Qty	Loc Code
WA007		663.2939906	
	116267	191.526272	
	116763	471.767719	

44.90

Dart Aerospace Ltd

W/O:		WORK ORDER CHANGES					
DATE	STEP	PROCEDURE CHANGE	By	Date	Qty	Approval Chief Eng / Prod Mgr	Approval QC Inspector

Part No: _____ **PAR #:** _____ **Fault Category:** _____ **NCR:** Yes No **DQA:** _____ **Date:** _____

Resolution: _____ **Disposition:** _____ **QA: N/C Closed:** _____ **Date:** _____

NCR:		WORK ORDER NON-CONFORMANCE (NCR)						
DATE	STEP	Description of NC Section A	Corrective Action Section B			Verification Section C	Approval Chief Eng	Approval QC Inspector
			Initial Chief Eng	Action Description Chief Eng	Sign & Date			

NOTE: Date & initial all entries

H:\fFORMS\Quality Assurance\approved QA\NCRWO RevE

Picklist Print

Monday, April 18, 2011 11:18:35 AM

Work Order ID: 68593

Parent Item: D3712-042

Parent Item Name: Basket Base Assembly

Start Date: 4/18/2011 **Required Date:** 4/27/2011

Start Qty: 1.00 **Required Qty:** 1.00

M304EX0.75-16F		Purchased	No	110	sf	387.1916	38	40
Expanded Metal Flat SS								SAD 11-04-20

Location		Loc Qty	Loc Code	
WA		387.1916		
	115012	150		36
	117197	237.1916		4

AN3-11A		Purchased	No	160	Each	207.0000	6	6
Bolt								11/04/27

Location		Loc Qty	Loc Code	
ST351		207		
	110865	107		6
	115457	100		

AN960JD10	NAS1149D0363J	Purchased	No	160	Each	0.0000	12	12
Washer								11/04/27
AN960JD8	NAS1149DN832J	Purchased	No	160	Each	0.0000	2	2
Washer								11/04/27
D2931		Manufactured	No	160	Each	690.0000	2	2
Bumper								11/04/27

Location		Loc Qty	Loc Code	
ST504		690		
	46064	690		2

Dart Aerospace Ltd

W/O:		WORK ORDER CHANGES					
DATE	STEP	PROCEDURE CHANGE	By	Date	Qty	Approval Chief Eng / Prod Mgr	Approval QC Inspector

Part No: _____ **PAR #:** _____ **Fault Category:** _____ **NCR:** Yes No **DQA:** _____ **Date:** _____

Resolution: _____ **Disposition:** _____ **QA: N/C Closed:** _____ **Date:** _____

NCR:		WORK ORDER NON-CONFORMANCE (NCR)						
DATE	STEP	Description of NC Section A	Corrective Action Section B			Verification Section C	Approval Chief Eng	Approval QC Inspector
			Initial Chief Eng	Action Description Chief Eng	Sign & Date			

NOTE: Date & initial all entries

H:\fFORMS\Quality Assurance\approved QA\NCRWO RevE

Picklist Print

Monday, April 18, 2011 11:18:35 AM

Work Order ID: 68593

Parent Item: D3712-042

Parent Item Name: Basket Base Assembly

Start Date: 4/18/2011 **Required Date:** 4/27/2011

Start Qty: 1.00 **Required Qty:** 1.00

MS20600-AD4W3	Purchased	No	160	Each	877.0000	2	2	11/04/27
Cherry Rivets								

Location		Loc Qty	Loc Code	
ST321		456		
	111636	456		2
WA018		421		
	107939	421		

MS21042L3	Purchased	No	160	Each	1,725.000	6	6	11/04/27
Nut								

Location		Loc Qty	Loc Code	
ST300		1725		
	116391	151		
	116540	800		6
	116549	774		

Dart Aerospace Ltd

W/O:		WORK ORDER CHANGES					
DATE	STEP	PROCEDURE CHANGE	By	Date	Qty	Approval Chief Eng / Prod Mgr	Approval QC Inspector

Part No: _____ **PAR #:** _____ **Fault Category:** _____ **NCR:** Yes No **DQA:** _____ **Date:** _____

Resolution: _____ **Disposition:** _____ **QA: N/C Closed:** _____ **Date:** _____

NCR:		WORK ORDER NON-CONFORMANCE (NCR)						
DATE	STEP	Description of NC Section A	Corrective Action Section B			Verification Section C	Approval Chief Eng	Approval QC Inspector
			Initial Chief Eng	Action Description Chief Eng	Sign & Date			

NOTE: Date & initial all entries

H:\fFORMS\Quality Assurance\approved QA\NCRWO RevE

	QTY -041	QTY -042	PART NUMBER	DESCRIPTION
B	X		D3712-041	BASKET BASE ASSEMBLY
		X	D3712-042	BASKET BASE ASSEMBLY
	2	2	D2327-3	SPACER BUSHING
	2	2	D2581	MOUNTING BRACKET
B	2	2	D2931	BUMPER
	2	2	D3725-1	HOOP
	2	2	D3726-1	RIB
	2	2	D3727-1	RIB
	2	2	D3734-1	RIB
	5	5	D3735-1	RIB
	1	1	D3735-3	RIB
	3	3	D3739-1	RIB
	3	3	D3740-1	RIB
	1	1	D3744-1	MESH
	1	1	D3746-1	RIB
	1	1	D3746-3	RIB
	2	2	D3746-5	RIB
	1	1	D3746-7	RIB
	3	3	D3748-1	HINGE HALF
	2	2	D3757-1	BLANKING PLATE
B	21	21	D3759-1	BUSHING
B	6	6	AN3-11A	BOLT
B	2	2	AN960JD8	WASHER
	12	12	AN960JD10	WASHER
B	2	2	MS20600AD4W3	RIVET
	6	6	MS21042L3	NUT

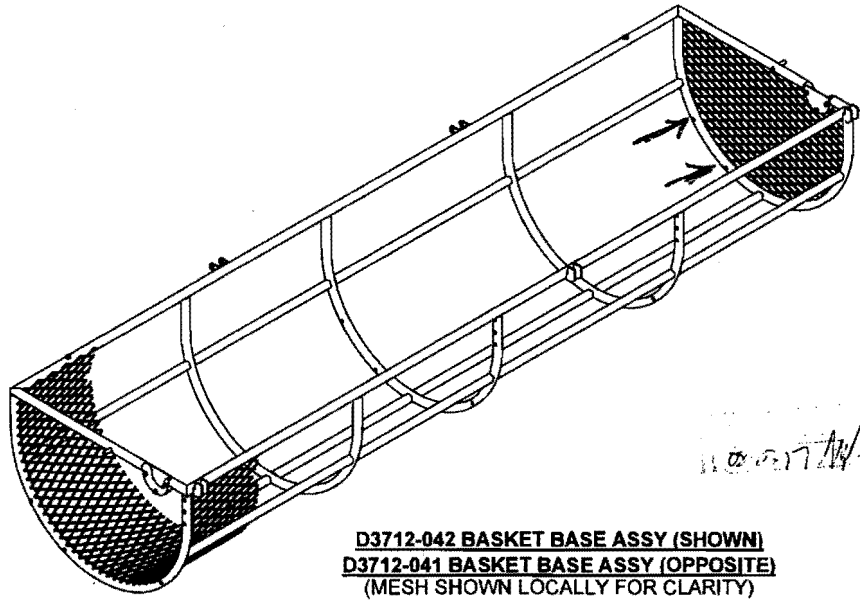

D3712-042 BASKET BASE ASSY (SHOWN)
D3712-041 BASKET BASE ASSY (OPPOSITE)
(MESH SHOWN LOCALLY FOR CLARITY)

WO 68893

NOTES:
1) MATERIAL: NONE
2) FINISH: POWDER COAT GLOSS WHITE (4.3.5.2) PER DART QSI 005 4.3
3) TOLERANCES: PER DART QSI 018 UNLESS OTHERWISE NOTED
4) UNITS: INCHES UNLESS OTHERWISE NOTED
5) BREAK SHARP EDGES: N/A
6) IDENTIFICATION: N/A
7) WEIGHT: N/A B
8) WELDING: PER DART QSI 004
9) MASK ALL HOLES PRIOR TO POWDER COATING.

REV.	DESCRIPTION	BY	DATE
B	ADDED-041 ASSEMBLY. WEIGHT WAS 41.50 lbs. ADDED D2931 BUMPER & HARDWARE & D3759-1 BUSHINGS. SHEET 2 ZONE C2 QTY FOR D3748-1 WAS 2. SHEET 4 ADDED DETAIL H. SHEET 3 ZONE C3 & SHEET 4 ZONE C4. ADDED MESH TRIMMING INSTRUCTIONS. SHEET 4 ZONE D2 AN3-11A BOLT WAS AN3-10A P/L UPDATED ACCORDINGLY.	AJS	08.02.22
A	NEW ISSUE	AJS	08.01.29

DESIGN	AJS	**DART AEROSPACE LTD** HAWKESBURY, ONTARIO, CANADA
DRAWN	AJS	
CHECKED		DRAWING NO. D3712 — REV. B — SHEET 1 OF 4
MFG. APPR.		
APPROVED		TITLE: BASKET BASE ASSY — SCALE: NTS
DE APPR.		
DATE	08.02.22	

COPYRIGHT © 2008 BY DART AEROSPACE LTD
THIS DOCUMENT IS PRIVATE AND CONFIDENTIAL AND IS SUPPLIED ON THE EXPRESS CONDITION THAT IT IS NOT TO BE USED FOR ANY PURPOSE OR COPIED OR COMMUNICATED TO ANY OTHER PERSON WITHOUT WRITTEN PERMISSION FROM DART AEROSPACE LTD.

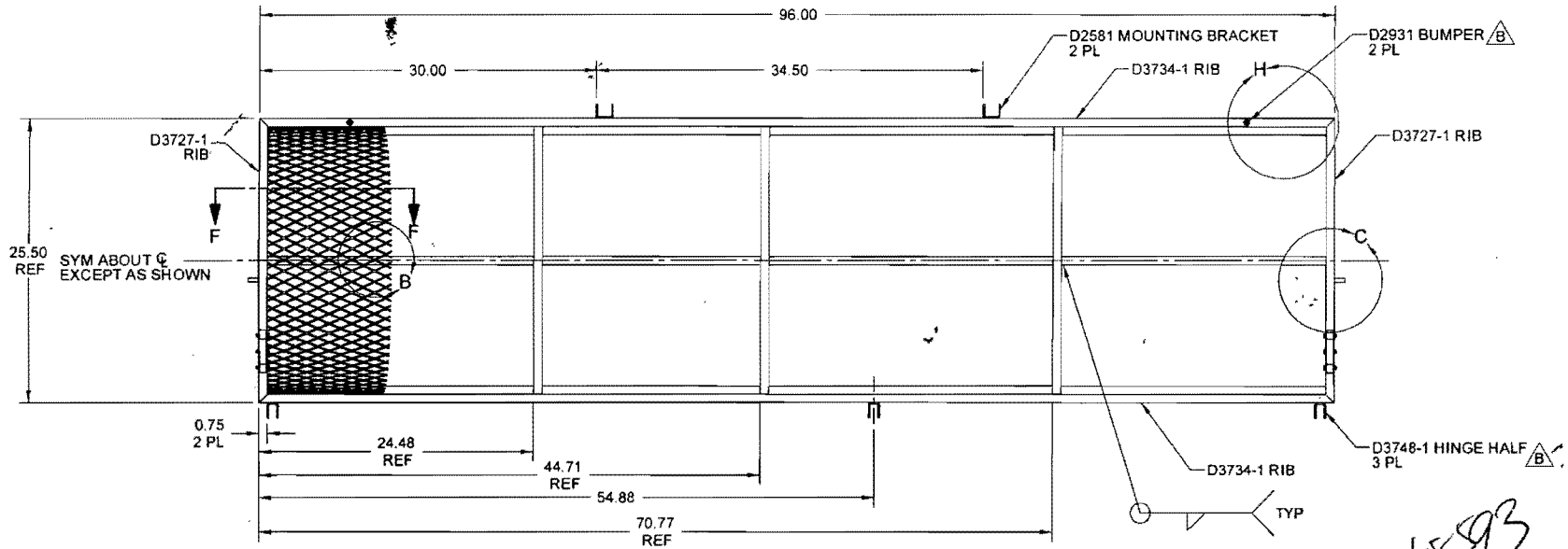

(MESH SHOWN LOCALLY FOR CLARITY)

6893

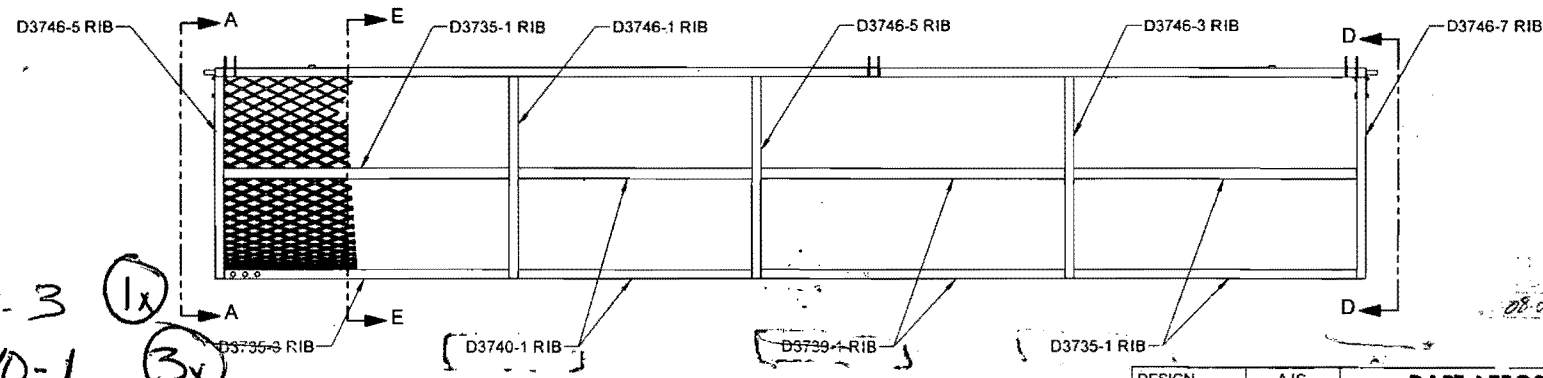

D3735-3 (1x)
D3740-1 (3x)
D3739-1 - (3x)
D3735-1 = (5x)

08-03-17

9 D3712-041 BASKET BASE ASSY (OPP)
9 D3712-042 BASKET BASE ASSY (SHOWN)

DESIGN	AJS	**DART AEROSPACE LTD** HAWKESBURY, ONTARIO, CANADA
DRAWN	AJS	
CHECKED		DRAWING NO. D3712 — REV. B — SHEET 2 OF 4
MFG. APPR.		
APPROVED		TITLE: BASKET BASE ASSY — SCALE: NTS
DE APPR.		
DATE	08.02.22	

COPYRIGHT © 2008 BY DART AEROSPACE LTD
THIS DOCUMENT IS PRIVATE AND CONFIDENTIAL AND IS SUPPLIED ON THE EXPRESS CONDITION THAT IT IS NOT TO BE USED FOR ANY PURPOSE OR COPIED OR COMMUNICATED TO ANY OTHER PERSON WITHOUT WRITTEN PERMISSION FROM DART AEROSPACE LTD.

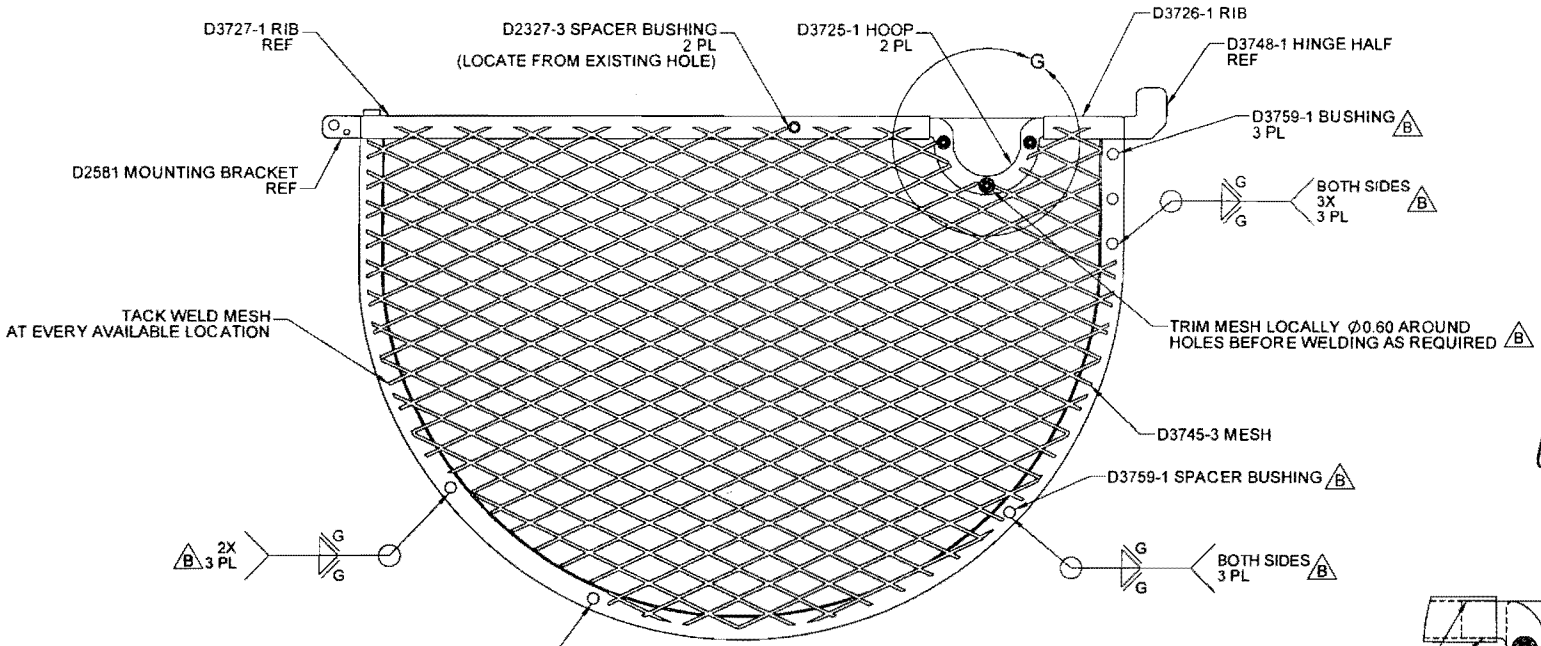

68593

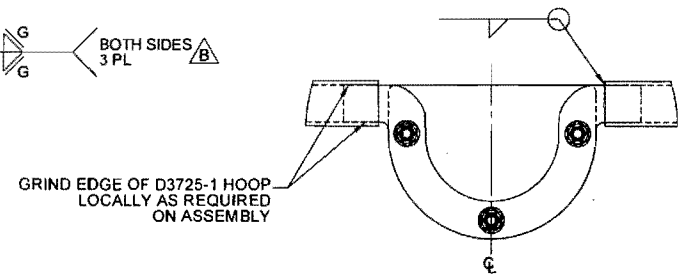

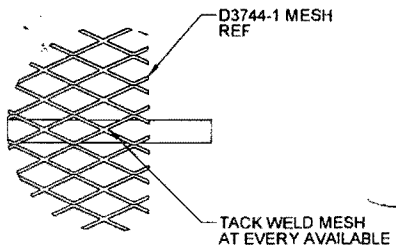

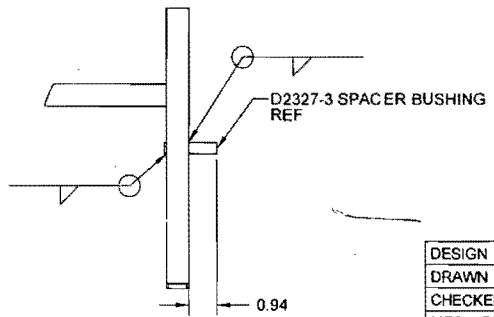

DESIGN	AJS	**DART AEROSPACE LTD** HAWKESBURY, ONTARIO, CANADA
DRAWN	AJS	DRAWING NO. D3712 — REV. B — SHEET 3 OF 4
CHECKED		TITLE: BASKET BASE ASSY — SCALE: NTS
MFG. APPR.		
APPROVED		
DE APPR.		
DATE	08.02.22	

COPYRIGHT © 2008 BY DART AEROSPACE LTD
THIS DOCUMENT IS PRIVATE AND CONFIDENTIAL AND IS SUPPLIED ON THE EXPRESS CONDITION THAT IT IS NOT TO BE USED FOR ANY PURPOSE OR COPIED OR COMMUNICATED TO ANY OTHER PERSON WITHOUT WRITTEN PERMISSION FROM DART AEROSPACE LTD

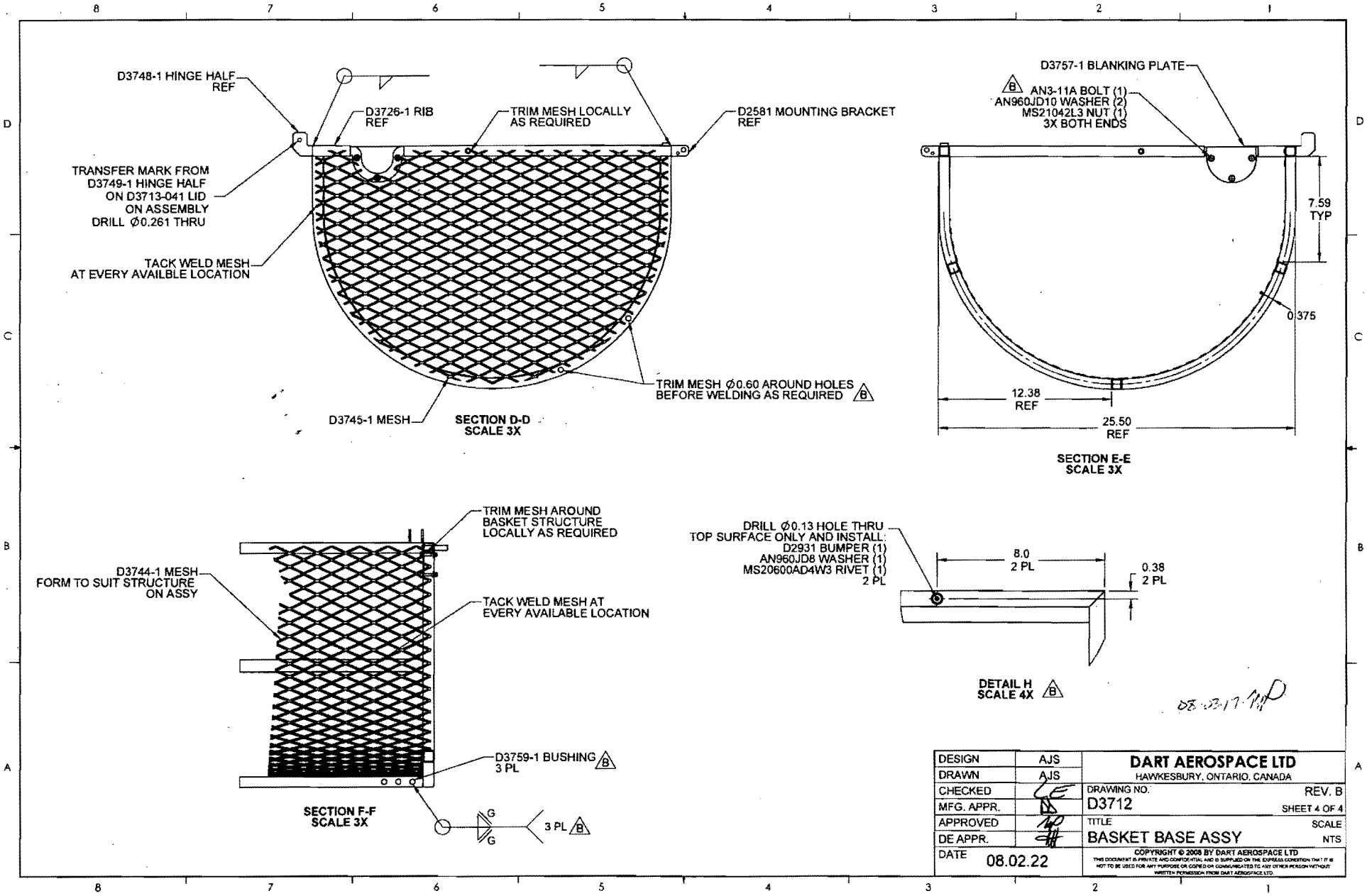
D3748-1 HINGE HALF REF
D3726-1 RIB REF
TRIM MESH LOCALLY AS REQUIRED
D2581 MOUNTING BRACKET REF
TRANSFER MARK FROM D3749-1 HINGE HALF ON D3713-041 LID ON ASSEMBLY DRILL Ø0.261 THRU
TACK WELD MESH AT EVERY AVAILBLE LOCATION
TRIM MESH Ø0.60 AROUND HOLES BEFORE WELDING AS REQUIRED B
D3745-1 MESH
SECTION D-D
SCALE 3X
D3757-1 BLANKING PLATE
B AN3-11A BOLT (1)
AN960JD10 WASHER (2)
MS21042L3 NUT (1)
3X BOTH ENDS
7.59 TYP
0.375
12.38 REF
25.50 REF
SECTION E-E
SCALE 3X
TRIM MESH AROUND BASKET STRUCTURE LOCALLY AS REQUIRED
D3744-1 MESH FORM TO SUIT STRUCTURE ON ASSY
TACK WELD MESH AT EVERY AVAILABLE LOCATION
D3759-1 BUSHING B 3 PL
SECTION F-F
SCALE 3X
G
G
3 PL B
DRILL Ø0.13 HOLE THRU TOP SURFACE ONLY AND INSTALL:
D2931 BUMPER (1)
AN960JD8 WASHER (1)
MS20600AD4W3 RIVET (1)
2 PL
8.0 2 PL
0.38 2 PL
DETAIL H
SCALE 4X B
08.03.17 MP
DESIGN AJS
DRAWN AJS
CHECKED
MFG. APPR.
APPROVED
DE APPR.
DATE 08.02.22
DART AEROSPACE LTD
HAWKESBURY, ONTARIO, CANADA
DRAWING NO. D3712
REV. B
SHEET 4 OF 4
TITLE BASKET BASE ASSY
SCALE NTS
COPYRIGHT © 2008 BY DART AEROSPACE LTD
THIS DOCUMENT IS PRIVATE AND CONFIDENTIAL AND IS SUPPLIED ON THE EXPRESS CONDITION THAT IT IS NOT TO BE USED FOR ANY PURPOSE OR COPIED OR COMMUNICATED TO ANY OTHER PERSON WITHOUT WRITTEN PERMISSION FROM DART AEROSPACE LTD.

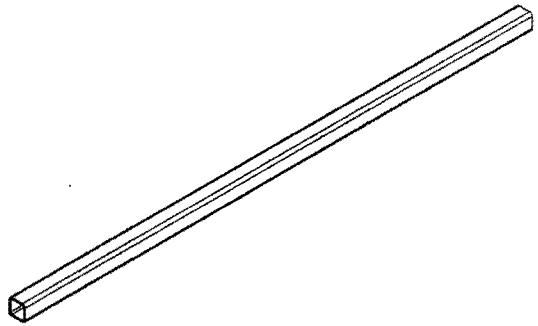

D3735-1 RIB

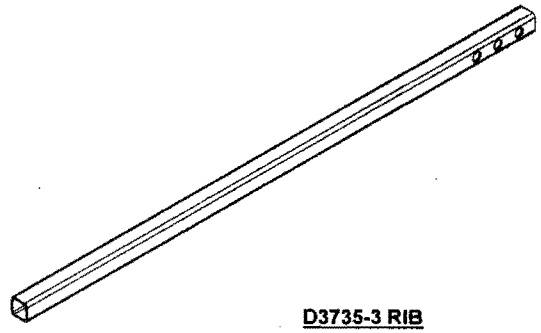

D3735-3 RIB

NOTES:
1) MATERIAL: AISI 304/316 STAINLESS STEEL SQUARE TUBE, 0.75 X 0.75 X 0.065 WALL
(REF. DART SPEC. M304TS0.750W0.065)
2) FINISH: NONE
3) TOLERANCES: PER DART QSI 018 UNLESS OTHERWISE NOTED
4) UNITS: INCHES UNLESS OTHERWISE NOTED
5) BREAK SHARP EDGES: 0.005 TO 0.010 MAX
6) IDENTIFICATION: N/A
7) WEIGHT: 1.14 lbs

REV.	DESCRIPTION	BY	DATE
B	SHEET 2 ZONE 1B Ø0.375 HOLES WERE Ø0.191.	AJS	08.03.05
A	INITIAL RELEASE	AJS	08.01.28

DESIGN	AJS	**DART AEROSPACE LTD** HAWKESBURY, ONTARIO, CANADA
DRAWN	AJS	
CHECKED		DRAWING NO. D3735 — REV. B — SHEET 1 OF 2
MFG. APPR.		
APPROVED		TITLE: RIB — SCALE: NTS
DE APPR.		
DATE	08.03.05	

COPYRIGHT © 2008 BY DART AEROSPACE LTD
THIS DOCUMENT IS PRIVATE AND CONFIDENTIAL AND IS SUPPLIED ON THE EXPRESS CONDITION THAT IT IS NOT TO BE USED FOR ANY PURPOSE OR COPIED OR COMMUNICATED TO ANY OTHER PERSON WITHOUT WRITTEN PERMISSION FROM DART AEROSPACE LTD.

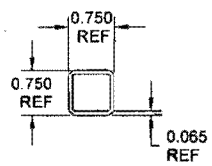

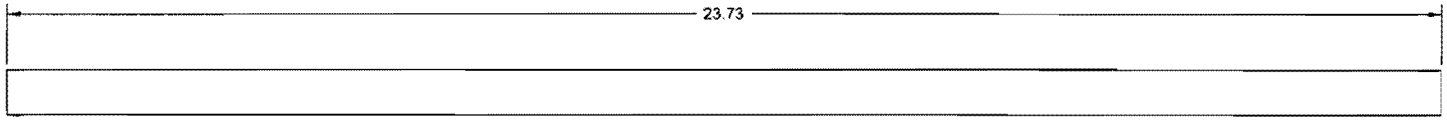

D3735-1 RIB

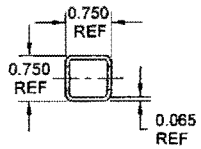

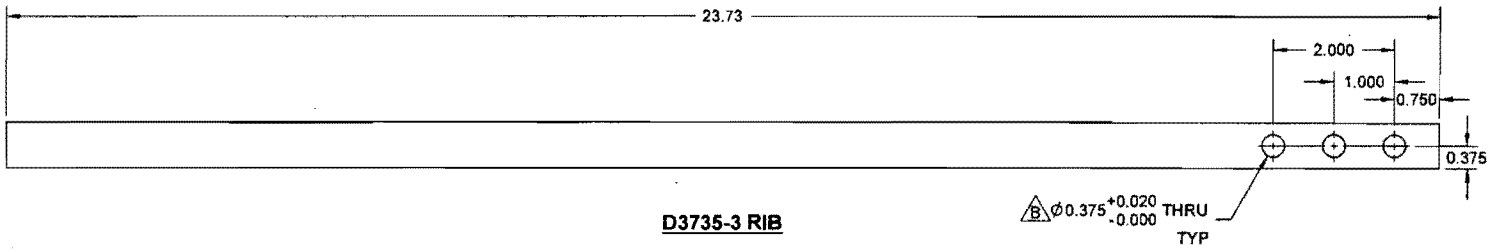

D3735-3 RIB

08.03.17

DESIGN	AJS	**DART AEROSPACE LTD** HAWKESBURY, ONTARIO, CANADA
DRAWN	AJS	
CHECKED		DRAWING NO. D3735 — REV. B — SHEET 2 OF 2
MFG. APPR.		
APPROVED		TITLE RIB — SCALE NTS
DE APPR.		
DATE	08.03.05	

COPYRIGHT © 2005 BY DART AEROSPACE LTD
THIS DOCUMENT IS PRIVATE AND CONFIDENTIAL AND IS SUPPLIED ON THE EXPRESS CONDITION THAT IT IS NOT TO BE USED FOR ANY PURPOSE OR COPIED OR COMMUNICATED TO ANY OTHER PERSON WITHOUT WRITTEN PERMISSION FROM DART AEROSPACE LTD.

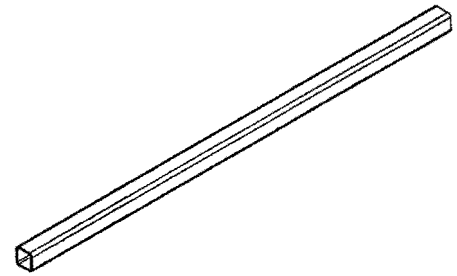

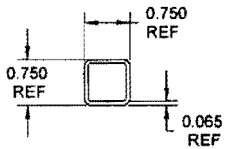

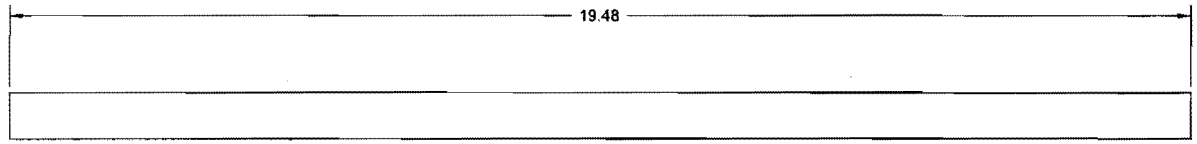

D3740-1 RIB

RELEASED
LE 08.02.25

NOTES:
1) MATERIAL: AISI 304/316 STAINLESS STEEL SQUARE TUBE, 0.75 X 0.75 X 0.065 WALL
(REF. DART SPEC. M304TS0.750W0.065)
2) FINISH: NONE
3) TOLERANCES: PER DART QSI 018 UNLESS OTHERWISE NOTED
4) UNITS: INCHES UNLESS OTHERWISE NOTED
5) BREAK SHARP EDGES: 0.005 TO 0.010
6) IDENTIFICATION: N/A
7) WEIGHT: 0.93 lbs

REV.	DESCRIPTION	BY	DATE
A	INITIAL RELEASE	AJS	08.01.28

DESIGN	AJS	**DART AEROSPACE LTD** HAWKESBURY, ONTARIO, CANADA
DRAWN	AJS	
CHECKED	LE	DRAWING NO. D3740 — REV. A — SHEET 1 OF 1
MFG. APPR.		
APPROVED		TITLE RIB — SCALE 1:2
DE APPR.		
DATE	08.01.28	

COPYRIGHT © 2008 BY DART AEROSPACE LTD
THIS DOCUMENT IS PRIVATE AND CONFIDENTIAL AND IS SUPPLIED ON THE EXPRESS CONDITION THAT IT IS NOT TO BE USED FOR ANY PURPOSE OR COPIED OR COMMUNICATED TO ANY OTHER PERSON WITHOUT WRITTEN PERMISSION FROM DART AEROSPACE LTD

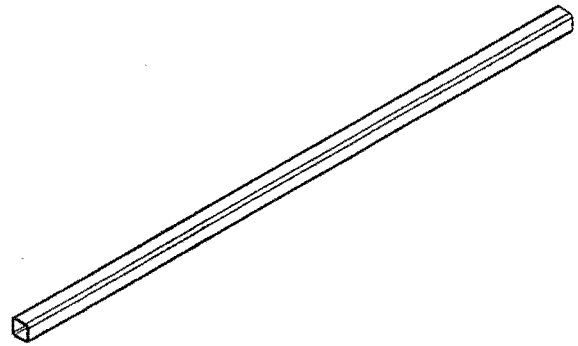

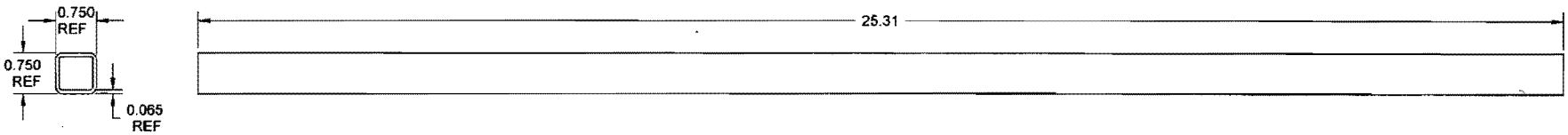

D3739-1 RIB

RELEASED
LE 08.02.25

NOTES:
1) MATERIAL: AISI 304/316 STAINLESS STEEL SQUARE TUBE, 0.75 X 0.75 X 0.065 WALL
(REF. DART SPEC. M304TS0.750W0.065)
2) FINISH: NONE
3) TOLERANCES: PER DART QSI 018 UNLESS OTHERWISE NOTED
4) UNITS: INCHES UNLESS OTHERWISE NOTED
5) BREAK SHARP EDGES: 0.005 TO 0.010 MAX
6) IDENTIFICATION: N/A
7) WEIGHT: 1.21 lbs

REV.	DESCRIPTION	BY	DATE
A	INITIAL RELEASE	AJS	08.01.28

DESIGN	AJS	**DART AEROSPACE LTD** HAWKESBURY, ONTARIO, CANADA
DRAWN	AJS	
CHECKED	LE	DRAWING NO. D3739 — REV. A — SHEET 1 OF 1
MFG. APPR.		
APPROVED		TITLE: RIB — SCALE 1:2
DE APPR.		
DATE	08.01.28	

COPYRIGHT © 2008 BY DART AEROSPACE LTD
THIS DOCUMENT IS PROPRIETARY, CONFIDENTIAL AND IS SUPPLIED ON THE EXPRESS CONDITION THAT IT IS NOT TO BE USED FOR ANY PURPOSE OR COPIED OR COMMUNICATED TO ANY OTHER PERSON WITHOUT WRITTEN PERMISSION FROM DART AEROSPACE LTD

2x

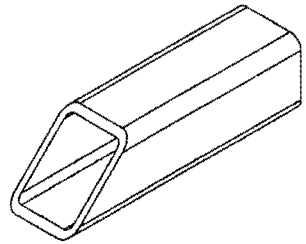

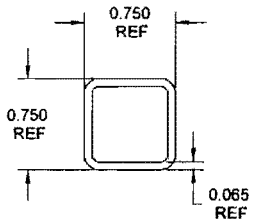

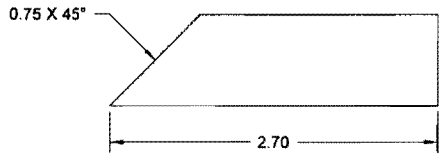

D3726-1 RIB

RELEASED
LE 08.02.25

NOTES:
1) MATERIAL: AISI 304/316 STAINLESS STEEL SQUARE TUBE, 0.75 X 0.75 X 0.065 WALL
(REF. DART SPEC. M304TS0.750W0.065)
2) FINISH: NONE
3) TOLERANCES: PER DART QSI 018 UNLESS OTHERWISE NOTED
4) UNITS: INCHES UNLESS OTHERWISE NOTED
5) BREAK SHARP EDGES: 0.005 TO 0.010 MAX
6) IDENTIFICATION: N/A
7) WEIGHT: 0.11 lbs

REV.	DESCRIPTION	BY	DATE
A	INITIAL RELEASE	AJS	08.01.28

DESIGN	AJS	**DART AEROSPACE LTD** HAWKESBURY, ONTARIO, CANADA
DRAWN	AJS	
CHECKED	LE	DRAWING NO. D3726 — REV. A — SHEET 1 OF 1
MFG. APPR.		
APPROVED		TITLE: RIB — SCALE 1:1
DE APPR.		
DATE	08.01.28	

COPYRIGHT © 2008 BY DART AEROSPACE LTD
THIS DOCUMENT IS PRIVATE AND CONFIDENTIAL AND IS SUPPLIED ON THE EXPRESS CONDITION THAT IT IS NOT TO BE USED FOR ANY PURPOSE OR COPIED OR COMMUNICATED TO ANY OTHER PERSON WITHOUT WRITTEN PERMISSION FROM DART AEROSPACE LTD.

2x

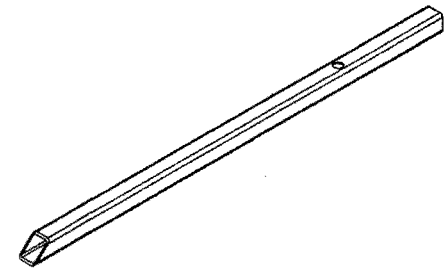

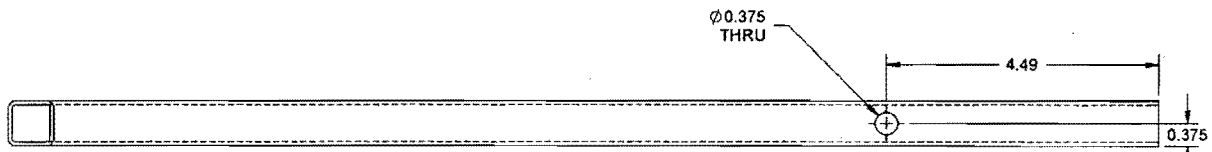

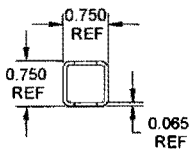

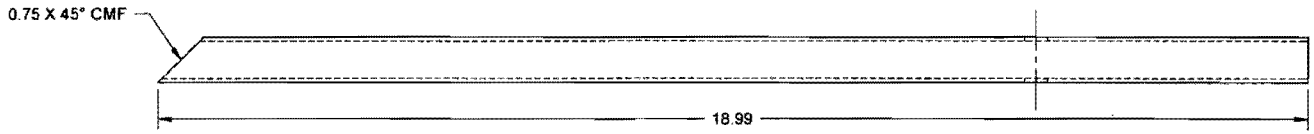

D3727-1 RIB

RELEASED
LE 08.02.25

NOTES:
1) MATERIAL: AISI 304/316 STAINLESS STEEL SQUARE TUBE, 0.75 X 0.75 X 0.065 WALL
(REF. DART SPEC. M304TS0.750W0.065)
2) FINISH: NONE
3) TOLERANCES: PER DART QSI 018 UNLESS OTHERWISE NOTED
4) UNITS: INCHES UNLESS OTHERWISE NOTED
5) BREAK SHARP EDGES: 0.005 TO 0.010 MAX
6) IDENTIFICATION: N/A
7) WEIGHT: 0.89 lbs

REV.	DESCRIPTION	BY	DATE
A	INITIAL RELEASE	AJS	08.01.28

DESIGN	AJS	DART AEROSPACE LTD HAWKESBURY, ONTARIO, CANADA	
DRAWN	AJS		
CHECKED	LE	DRAWING NO. D3727	REV. A SHEET 1 OF 1
MFG. APPR.			
APPROVED		TITLE RIB	SCALE 1:2
DE APPR.			
DATE	08.01.28		

COPYRIGHT © 2008 BY DART AEROSPACE LTD
THIS DOCUMENT IS PRIVATE AND CONFIDENTIAL AND IS SUPPLIED ON THE EXPRESS CONDITION THAT IT IS NOT TO BE USED FOR ANY PURPOSE OR COPIED OR COMMUNICATED TO ANY OTHER PERSON WITHOUT WRITTEN PERMISSION FROM DART AEROSPACE LTD

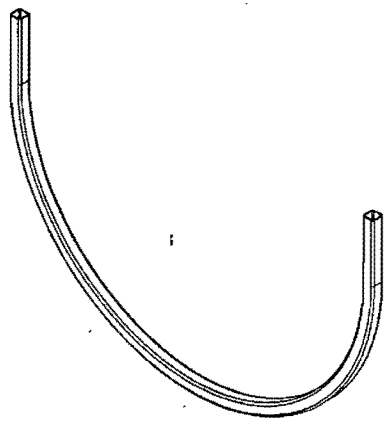

D3746-1 RIB

1x

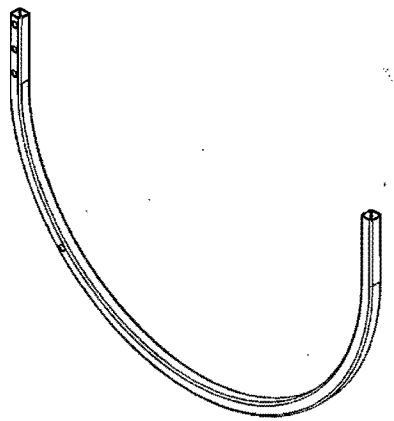

D3746-3 RIB

1x

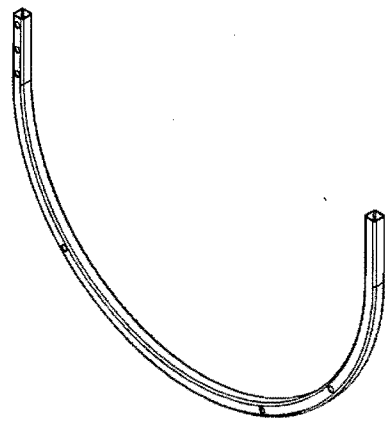

D3746-5 RIB

2x

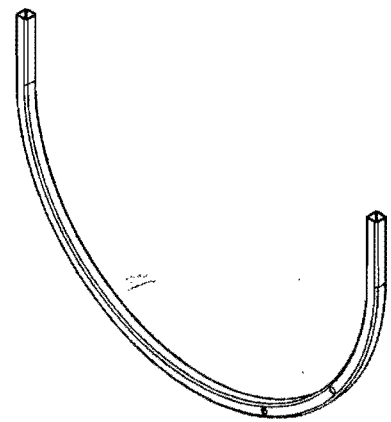

D3746-7 RIB

1x

NOTES:
1) MATERIAL: AISI 304/316 STAINLESS STEEL SQUARE TUBE, 0.75 X 0.75 X 0.065 WALL
(REF. DART SPEC. M304TS0.750W0.065)
2) FINISH: NONE
3) TOLERANCES: PER DART QSI 018 UNLESS OTHERWISE NOTED
4) UNITS: INCHES UNLESS OTHERWISE NOTED
5) BREAK SHARP EDGES: 0.005 TO 0.010 MAX
6) IDENTIFICATION: N/A
7) WEIGHT: 2.25 lbs
8) M/F D3166-1 BASKET HOOP

REV.	DESCRIPTION	BY	DATE
B	SHEET 2 ZONE C4, B4 & SHEET 3 ZONE C7, HOLES WERE Ø0.257. SHEET 3 ZONE B2 & B5 HOLES WERE Ø0.191. SHEET 3 ZONE 7B HOLE QTY WAS 4PL.	AJS	08.03.03
A	INITIAL RELEASE	AJS	08.01.28

DESIGN	AJS	**DART AEROSPACE LTD** HAWKESBURY, ONTARIO, CANADA	
DRAWN	AJS		
CHECKED		DRAWING NO. D3746	REV. B
MFG. APPR.			SHEET 1 OF 3
APPROVED		TITLE RIB	SCALE NTS
DE APPR.			
DATE	08.03.03		

COPYRIGHT © 2008 BY DART AEROSPACE LTD
THIS DOCUMENT IS PRIVATE AND CONFIDENTIAL AND IS SUPPLIED ON THE EXPRESS CONDITION THAT IT IS NOT TO BE USED FOR ANY PURPOSE OR COPIED OR COMMUNICATED TO ANY OTHER PERSON WITHOUT WRITTEN PERMISSION FROM DART AEROSPACE LTD

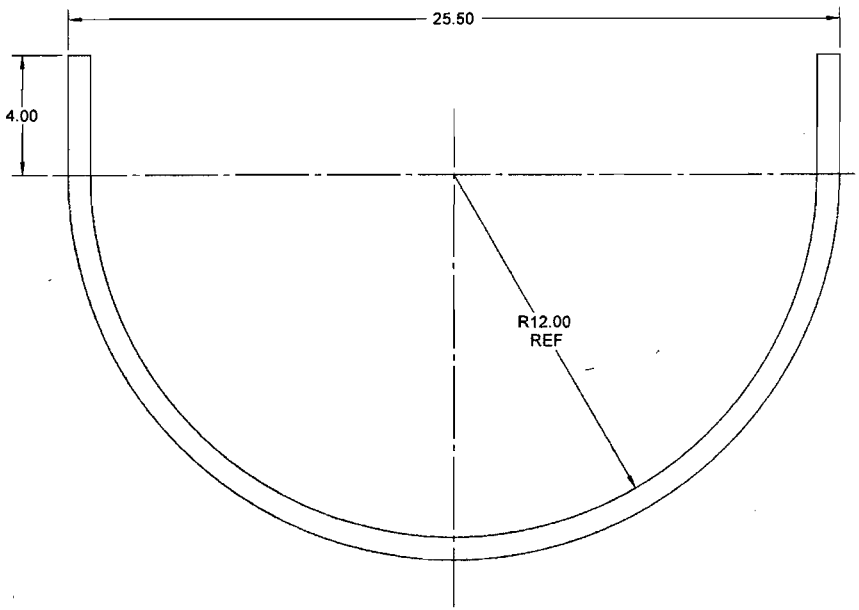

D3746-1 RIB

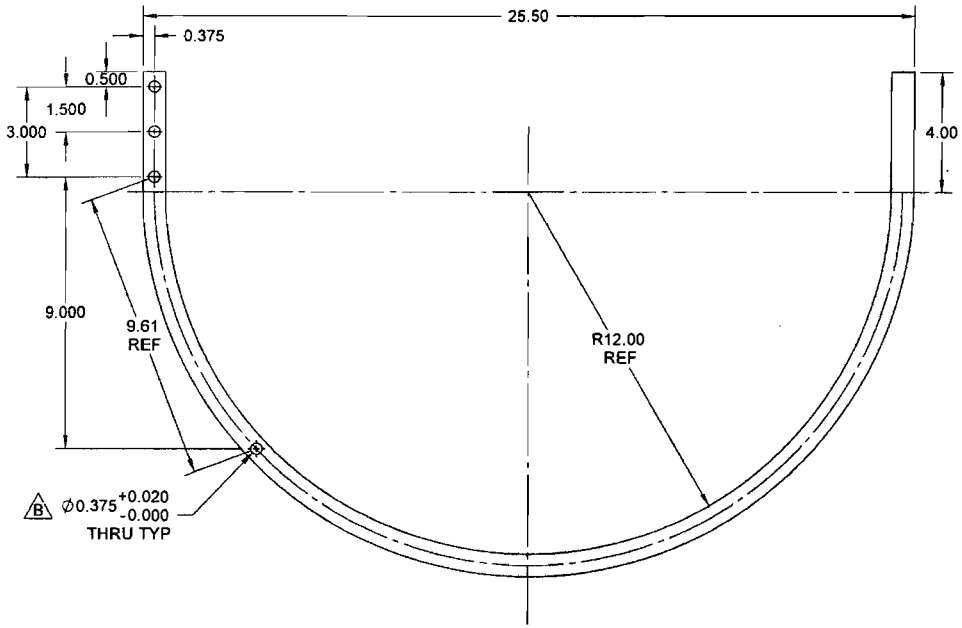

D3746-3 RIB

08.03.17

DESIGN	AJS	**DART AEROSPACE LTD** HAWKESBURY, ONTARIO, CANADA
DRAWN	AJS	
CHECKED		DRAWING NO. D3746 — REV. B — SHEET 2 OF 3
MFG. APPR.		
APPROVED		TITLE RIB — SCALE NTS
DE APPR.		
DATE	08.03.03	

COPYRIGHT © 2008 BY DART AEROSPACE LTD
THIS DOCUMENT IS PRIVATE AND CONFIDENTIAL AND IS SUPPLIED ON THE EXPRESS CONDITION THAT IT IS NOT TO BE USED FOR ANY PURPOSE OR COPIED OR COMMUNICATED TO ANY OTHER PERSON WITHOUT WRITTEN PERMISSION FROM DART AEROSPACE LTD

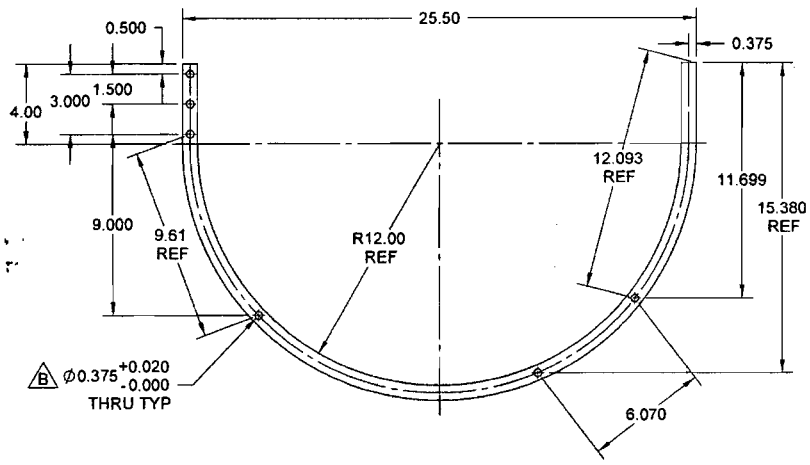

D3746-5 RIB

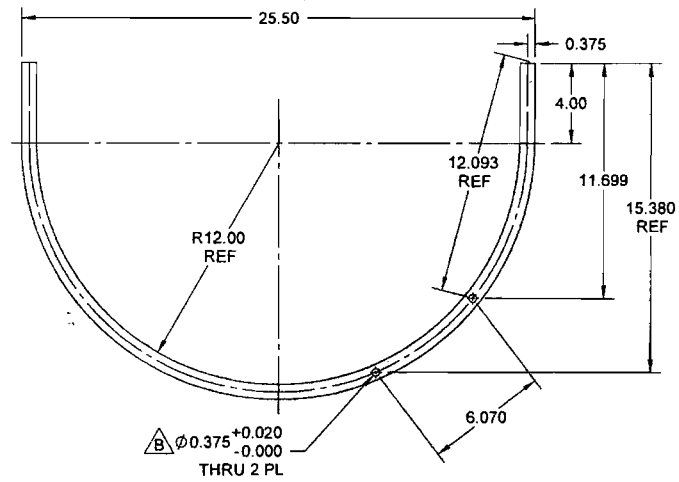

D3746-7 RIB

DESIGN	AJS	**DART AEROSPACE LTD** HAWKESBURY, ONTARIO, CANADA
DRAWN	AJS	
CHECKED		DRAWING NO. D3746 — REV. B — SHEET 3 OF 3
MFG. APPR.		
APPROVED		TITLE RIB — SCALE NTS
DE APPR.		
DATE	08.03.03	

COPYRIGHT © 2008 BY DART AEROSPACE LTD
THIS DOCUMENT IS PRIVATE AND CONFIDENTIAL AND IS SUPPLIED ON THE EXPRESS CONDITION THAT IT IS NOT TO BE USED FOR ANY PURPOSE OR COPIED OR COMMUNICATED TO ANY OTHER PERSON WITHOUT WRITTEN PERMISSION FROM DART AEROSPACE LTD.